#8 x 1" or 1-1/4"
Pocket-Hole Screws

Table Saw Miter Gauge
(not included)

3/4 x 2-3/4" x 24"
Baltic Birch Fence

7/64" pilot hole
1/2" deep

5/32" shank hole,
countersunk

#8 x 1-1/4" Flat Head
Wood Screws

MITER
GAUGE

3/4 x 3/4 x 2-1/2" Baltic
Birch Stop Block Top

3/4 x 2-1/2 x 3-3/8"
Baltic Birch Stop Block

ADJUSTABLE
STOP BLOCK

FENCE

220 Grit PSA Sandpaper, cut
to fit face of fence

#8 x 1" Round Head
Brass Wood Screw

1/8 x 1/8"
Rabbet

RABBET DETAIL

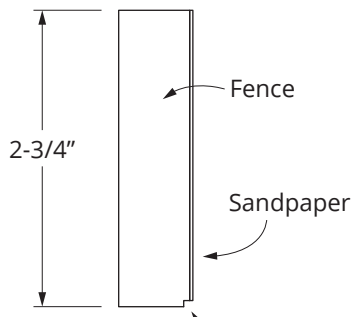

STOP BLOCK DETAIL

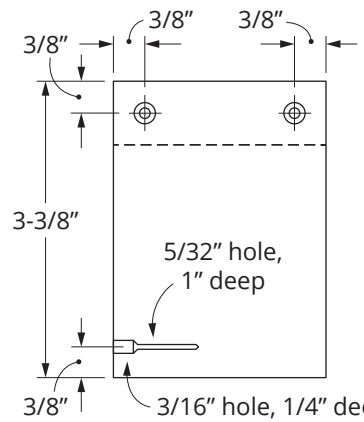

THE WOODSMITH STORE
24" BASIC AUXILIARY MITER
GAUGE FENCE KIT

©2020 The Woodsmith Store. All Rights Reserved